EMERSON Climate Technologies

Application Engineering

Copeland brand products

BULLETIN

AE4-1305 R13

February 2014

Application Guidelines for Copeland™ AF, AR & AS Refrigeration Hermetic Compressors

TABLE OF CONTENTS

Safety Instructions

Copeland™ compressors are manufactured according to the latest U.S. and European Safety Standards. Particular emphasis has been placed on the user's safety. Safety icons are explained below and safety instructions applicable to the products in this bulletin are grouped on page 3. These instructions should be retained throughout the lifetime of the compressor. **You are strongly advised to follow these safety instructions.**

Safety Icon Explanation

DANGER	DANGER indicates a hazardous situation which, if not avoided, will result in death or serious injury.
WARNING	WARNING indicates a hazardous situation which, if not avoided, could result in death or serious injury.
CAUTION	CAUTION, used with the safety alert symbol, indicates a hazardous situation which, if not avoided, could result in minor or moderate injury.
NOTICE	NOTICE is used to address practices not related to personal injury.
CAUTION	CAUTION, without the safety alert symbol, is used to address practices not related to personal injury.

Instructions Pertaining to Risk of Electrical Shock, Fire, or Injury to Persons

WARNING	**ELECTRICAL SHOCK HAZARD** • Disconnect and lock out power before servicing. • Discharge all capacitors before servicing. • Use compressor with grounded system only. • Molded electrical plug must be used when required. • Refer to original equipment wiring diagrams. • Electrical connections must be made by qualified electrical personnel. • Failure to follow these warnings could result in serious personal injury.
WARNING	**PRESSURIZED SYSTEM HAZARD** • System contains refrigerant and oil under pressure. • Remove refrigerant from both the high and low compressor side before removing compressor. • Use appropriate back up wrenches on rotalock fittings when servicing. • Never install a system and leave it unattended when it has no charge, a holding charge, or with the service valves closed without electrically locking out the system. • Use only approved refrigerants and refrigeration oils. • Personal safety equipment must be used. • Failure to follow these warnings could result in serious personal injury.
WARNING	**BURN HAZARD** • Do not touch the compressor until it has cooled down. • Ensure that materials and wiring do not touch high temperature areas of the compressor. • Use caution when brazing system components. • Personal safety equipment must be used. • Failure to follow these warnings could result in serious personal injury or property damage.
CAUTION	**COMPRESSOR HANDLING** • Use the appropriate lifting devices to move compressors. • Personal safety equipment must be used. • Failure to follow these warnings could result in personal injury or property damage.

Safety Statements

- Refrigerant compressors must be employed only for their intended use.
- Only qualified and authorized HVAC or refrigeration personnel are permitted to install, commission and maintain this equipment.
- Electrical connections must be made by qualified electrical personnel.
- All valid standards and codes for installing, servicing, and maintaining electrical and refrigeration equipment must be observed.

Introduction

Hermetic compressors have been developed for the 1/8 hp to 1 hp refrigeration applications. These compressors are designed to operate safely and reliably in the high, medium and extended medium temperature ranges. In addition, some of the extended medium temperature compressors have the ability to operate in the low temperature range with SPECIAL APPLICATION ENGINEERING APPROVAL. It must be noted however, that under low evaporating conditions the operating envelope for these models is restricted.

Nomenclature

The HFC compressor model numbers include the nominal capacity at the standard ARI 60Hz rating conditions. The HCFC models still refer to the nominal horsepower, (hp). Please refer to product literature for specific model number details.

Operating Envelope

There are several refrigerants that have been approved for use with the A family of compressors, see **Table 1** at the end of this bulletin. These models are intended for refrigeration type duty. The approved operating envelopes are depicted in **Figures 7** through **12**. Published performance tables and coefficients will only contain data to 90ºF condensing temperature. However, the compressors are approved to operate to 70°F condensing.

The envelopes are defined by the following compressor limitations:

- Discharge line temperature 225°F
- Discharge valve backer 275°F
- Oil sump 200°F
- Motor windings 275°F

Note: For additional data on the proper use of R-290, please reference Application Bulletin **AE4-1380.**

There are only a limited number of R-290 compressors available at this time; the compressor's nomenclature will be designated with a "**U**" in the eighth character for R-290 application. Example: ASE18C4**U**-IAA

Compressors designed for the use of R-290 will not be charged with a positive dry air charge but will have a slight vacuum from the factory.

Superheat Requirements

In order to assure that liquid refrigerant does not return to the compressor during the running cycle, attention must be given to maintaining proper superheat at the compressor suction inlet. Emerson recommends a minimum of 20°F (11°C) superheat, measured on the suction line 6 inches (152mm) from the suction valve, to prevent liquid refrigerant floodback.

Another method to determine if liquid refrigerant is returning to the compressor is to accurately measure the temperature difference between the compressor oil crankcase and the suction line. During continuous operation we recommend that this difference be a minimum of 50°F (27°C). This “crankcase differential temperature” requirement supersedes the minimum suction superheat requirement in the last paragraph. To measure oil temperature through the compressor shell, place a thermocouple on the bottom center (not the side) of the compressor shell and insulate from the ambient.

During rapid system changes, such as defrost or ice harvest cycles, this temperature difference may drop rapidly for a short period of time. When the crankcase temperature difference falls below the recommended 50°F (27°C), our recommendation is the duration should not exceed a maximum (continuous) time period of two minutes and should not go lower than a 25°F (14°C) difference.

Contact your Emerson Climate Technologies representative regarding any exceptions to the above requirements.

Suction Accumulator

The addition of a suction accumulator can be an effective method to prevent damage to the compressor due to continuous floodback. Through extensive testing, Emerson recommends the use of suction accumulators if the system refrigerant charge exceeds the following limits as shown in **Table 2** at the end of this bulletin.

Crankcase Heaters

Crankcase heaters are recommended on all outdoor applications or indoor applications below 40°F. A crankcase heater is also required on any system with an accumulator.

Lubricants

Compressors that are approved for use with HFC refrigerants are charged with polyol ester lubricant (POE). HFC refrigerants require the use of a POE lubricant to provide proper miscibility and lubricity. The model nomenclature denotes if the compressor is charged with a POE lubricant. If the eighth character in the model nomenclature is the letter "**E**" then the

compressor is charged with a POE lubricant, example AFE13C4**E**-IAA.

CAUTION

POE must be handled carefully and the proper protective equipment (gloves, eye protection, etc.) must be used when handling POE lubricant. POE must not come into contact with any surface or material that might be harmed by POE, including without limitation, certain polymers (e.g. PVC/ CPVC and polycarbonate).

R-22 models are supplied with alkylbenzene oil. It is not reflected in the model number.

In the event lubricant needs to be added to the system, the proper approved lubricant must be used. See **Form 93-11**, *Refrigerants/Lubricants Approved for Use in Copeland™ Compressors,* for a complete list of approved lubricants. The compressor recharge is 2 oz. less than the oil charge listed on the nameplate.

Practical Considerations

The application restrictions imposed on these models will require careful system design. Some considerations for the designer are as follow:

1. Units operating at low evaporator temperatures will be susceptible to overheating with dirty condensers and/or restricted air flow. Large condensers (with low TD's) should be designed into systems using these compressors and proper condenser coil maintenance will be more critical. System Air flow across the compressor and condenser should be designed to maintain a Discharge line temperature (Measured 6 inches from the compressor) below 225°F while functioning within the approve operating envelope of each compressor. Minimum suction line pressure drops will be important to maintain SST limits at the compressor.
2. Traditional superheat settings at the TXV's may be too high to maintain the return gas temperature limits specified.
3. Suction lines should be well insulated.
4. Suction to liquid heat exchangers may not be desirable if return gas temperatures specified are to be maintained.

Deep Vacuum Operation

WARNING

Never attempt to start a compressor while it is in a vacuum; always break the vacuum with a refrigerant charge before applying power. Operating a compressor in a deep vacuum could cause electrical arcing inside the compressor.

A low pressure control is required for protection against deep vacuum operation. Refrigerant compressors are not designed for and should not be used to evacuate a refrigeration or air conditioning system. See **AE24-1105** for proper system evacuation procedures.

High Potential (Hipot) Testing

Many of the Copeland brand compressors are configured with the motor below the compressor. As a result when liquid refrigerant is within the compressor shell the motor can be immersed in liquid refrigerant to a greater extent than with compressors with the motor mounted above the compressor. When Copeland brand compressors are Hipot tested and liquid refrigerant is in the shell, they can show higher levels of leakage current than compressors with the motor on top because of the higher electrical conductivity of liquid refrigerant than refrigerant vapor and oil. This phenomenon can occur with any compressor when the motor is immersed in refrigerant. The level of current leakage does not present any safety issue. To lower the current leakage reading the system should be operated for a brief period of time to redistribute the refrigerant to a more normal configuration and the system Hipot tested again. See bulletin **AE4-1294** for Megohm testing recommendations. Under no circumstances should the Hipot or Megohm test be performed while the compressor is under a vacuum.

WARNING

High Potential (Hipot) Testing/Megohm Testing with R-290

Special attention should be taken when using a Hipot/ Megohm reading on an R-290 compressor. These tests can induce an electrical arc and cause a potential fire/explosion hazard. Compressors removed from an R-290 system will need to have the oil drained and a nitrogen purge introduced to flush any remaining R-290 from the compressor prior to Hipot /Megohm testing.

Electrical Connections

Single phase motor connections are shown in **Figures 1** through **4**.

It is recommended that insulated terminal connectors be used within the compressor's terminal box whenever possible. Ensure that the terminal connections do not interfere with the closing of the terminal box cover.

Terminal covers must be installed properly prior to energizing the compressor.

Mounting

The AF, AR and AS compressors are internally spring mounted to reduce vibrations. Resilient type mounts have been developed specifically for these compressors. See **Table 3**. Typical mounting assemblies are shown in **Figures 5** and **6**.

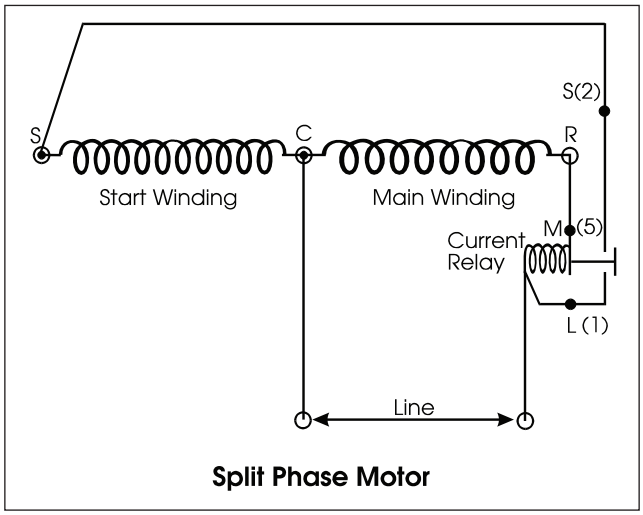

Figure 1

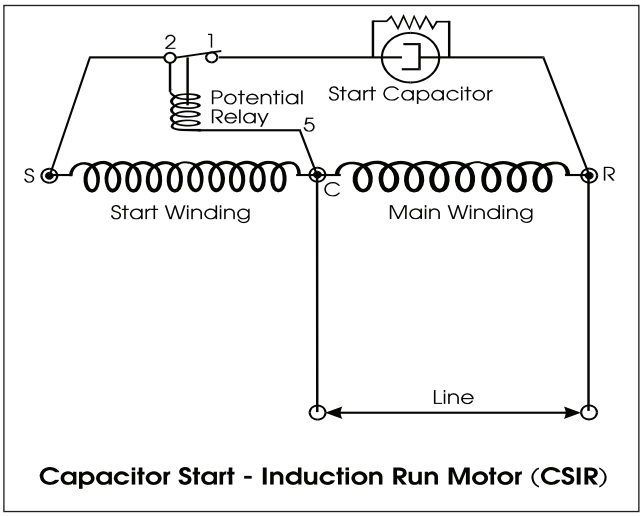

Figure 2

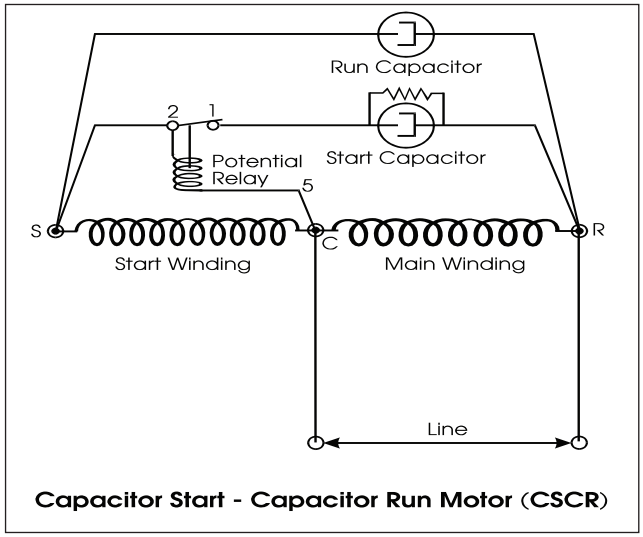

Figure 3

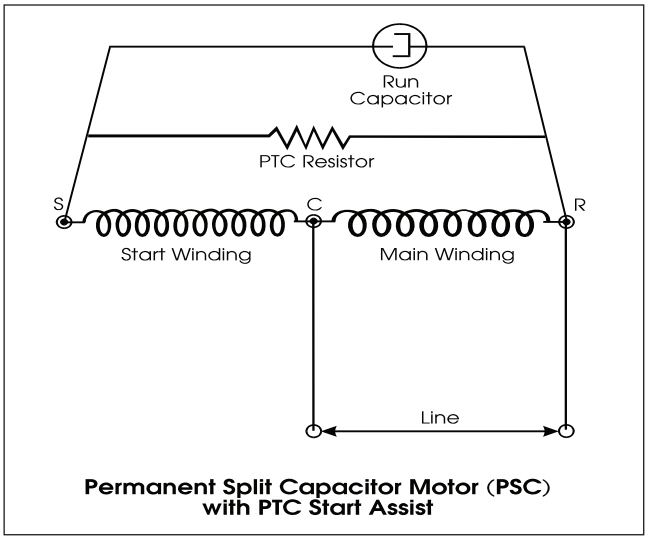

Figure 4

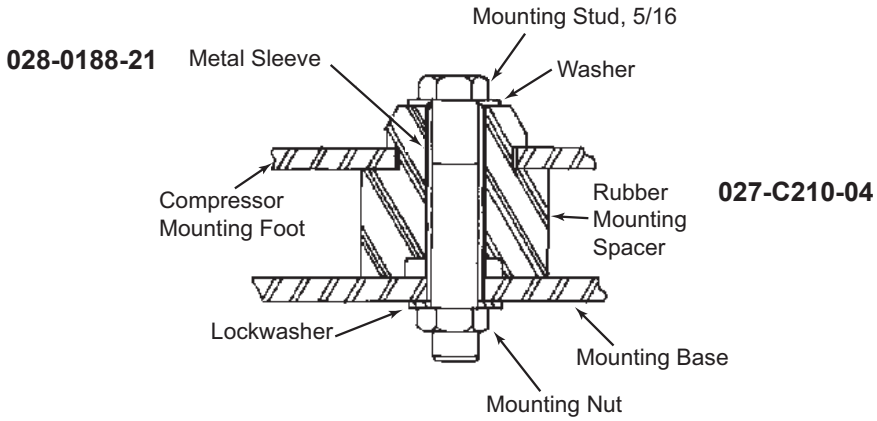

Typical Mounting Assembly for Grommets Designed for Straight Through Sleeves or Studs

Figure 5
Mounting Kit 527-C001-00

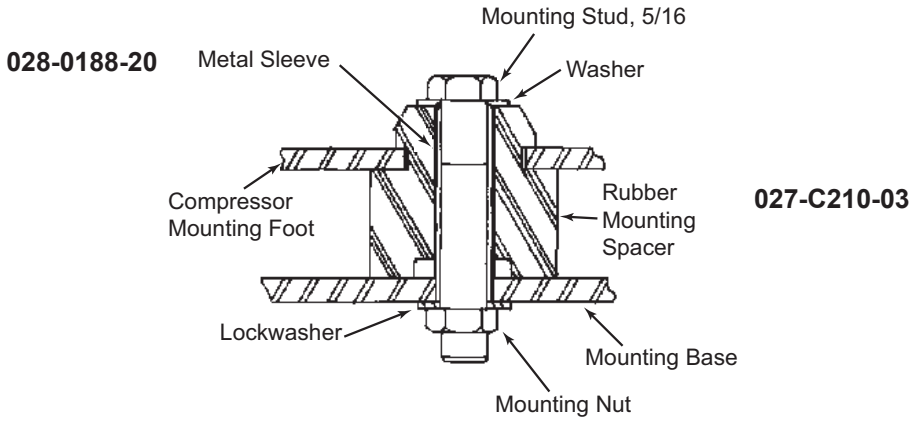

Typical Mounting Assembly for Grommets Designed for Straight Through Sleeves or Studs

Figure 6
Mounting Kit 527-C001-02

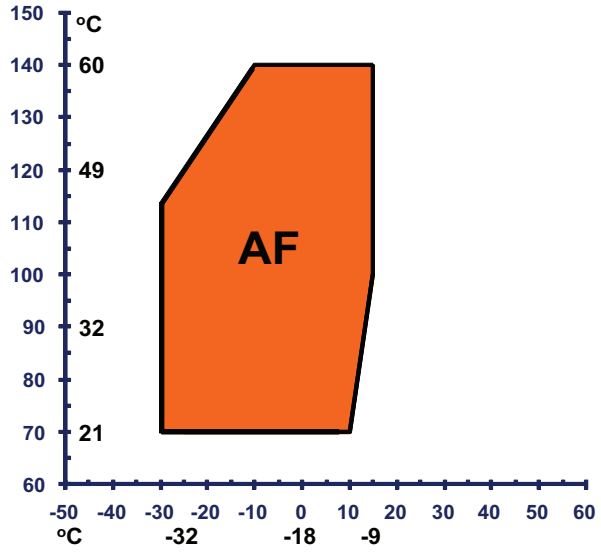

Figure 7
R-404A / R-507 / R-290* – EXT. MED TEMP.

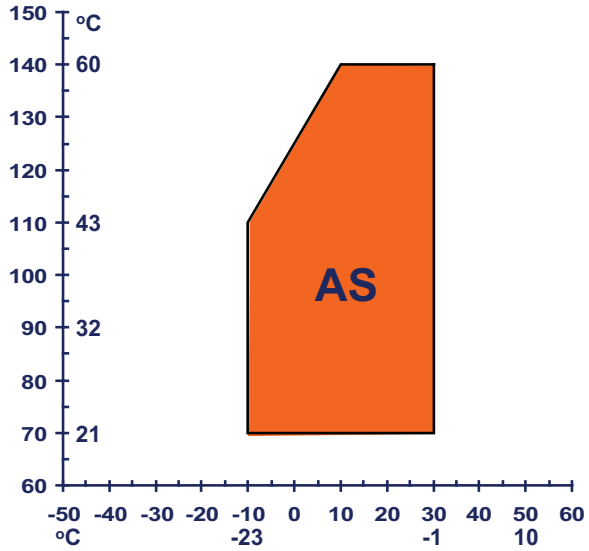

Figure 8
R-404A / R-507 / R-290* – MED TEMP.

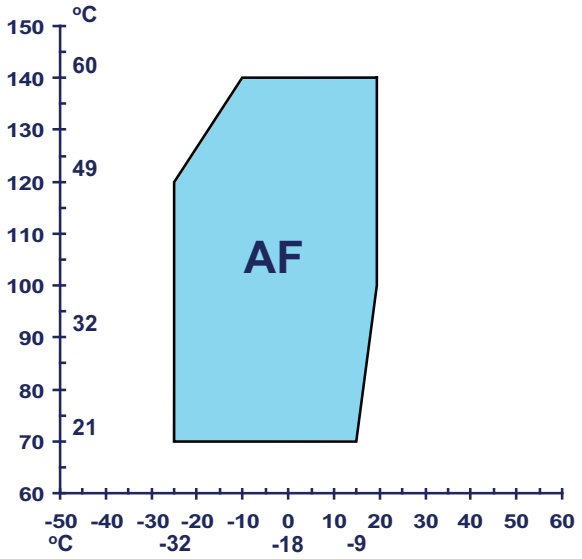

Figure 9
R-134a – EXT. MED. TEMP.

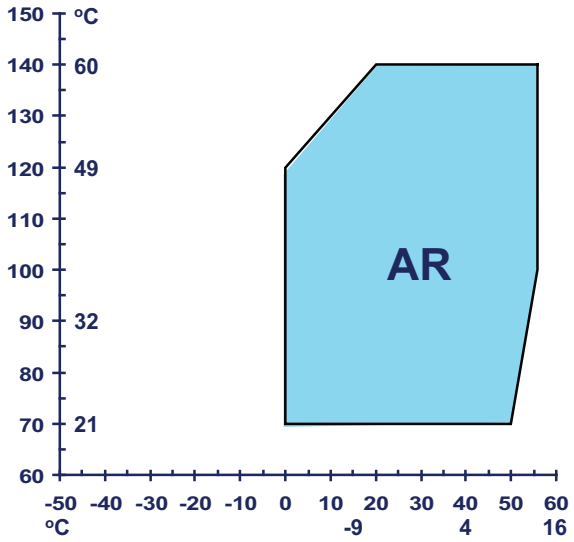

Figure 10
R-134a – HIGH TEMP.

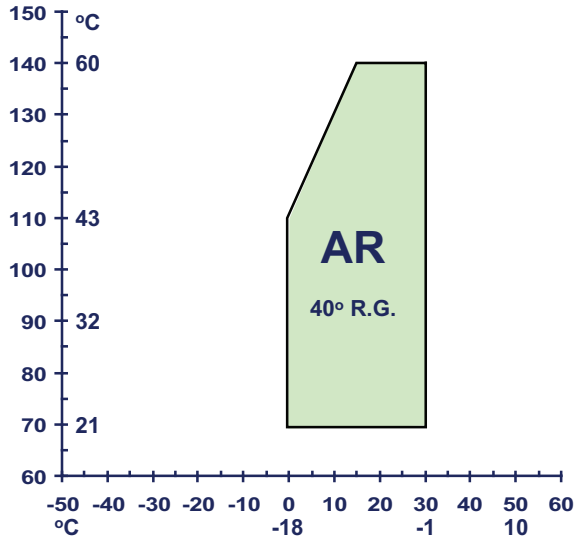

Figure 11
R-22 – MED. TEMP.

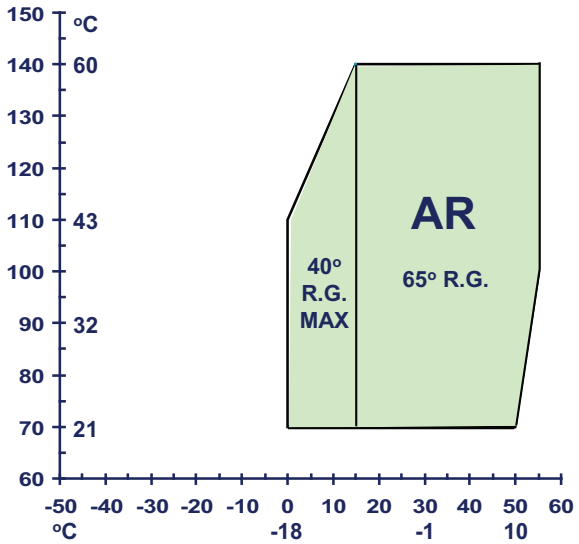

Figure 12
R-22 – HIGH TEMP.

Table 1 – Approved Refrigerants and Lubricants

Model	Refrigerant	Lubricant	Envelope
AF	R-404A/R-507/R-290*	ICI RL224B	Figure 7
AS	R-404A/R-507/R-290*	ICI RL224B	Figure 8
AF	R-134a	ICI RL224B	Figure 9
AR	R-134a	ICI RL224B	Figure 10
AR	R-22	AB46	Figures 11 and 12

CAUTION

**** Standard refrigeration compressors cannot be used in R-290 applications under any circumstances!***

Table 2 – Refrigerant Charge Limits

Third Character Designation Compressor Shell Series	Refrigerant Type	Refrigerant Charge Limitations (ounces)
AF(B)	R-404A / R-290*	10.6
AR(B)	R-134a / R-22	10.6
AS(B)	R-404A / R-507 / R-290*	10.6
AF(E)	R-134a / R-404A / R-507 / R-290*	10.6
AR(E)	R-134a / R-22	10.6
AS(E)	R-404A / R-507 / R-290*	10.6
AF(T)	R-134a / R-404A / R-507 / R-290*	14.1
AR(T)	R-134a / R-22	14.1
AS(T)	R-404A / R-507 / R-290*	14.1
AF(J)	R-404A / R-507 / R-290*	29.0
AR(J)	R-134a	29.0
ARD	R-22	10.6
ARF	R-22	10.6
ARG	R-22	10.6
ARN	R-22	14.1
ARM	R-22	14.1

CAUTION

Standard refrigeration compressors cannot be used in R-290 applications under any circumstances!

Table 3 – Mounting Kits

Third Character Designation Compressor shell series	Emerson Mounting Kit Part Number	Frequency
AF(B)	527-C001-02	50 & 60 Hertz
AR(B)	527-C001-02	50 & 60 Hertz
AS(B)	527-C001-02	50 & 60 Hertz
AF(E)	527-C001-02	50 & 60 Hertz
AR(E)	527-C001-02	50 & 60 Hertz
AS(E)	527-C001-02	50 & 60 Hertz
AF(T)	527-C001-00	50 & 60 Hertz
AR(T)	527-C001-00	50 & 60 Hertz
AS(T)	527-C001-00	50 & 60 Hertz
ARD	527-C001-02	50 & 60 Hertz
ARF	527-C001-02	50 & 60 Hertz
ARG	527-C001-02	50 & 60 Hertz