bryant

day & night

Payne

installation, operation, and maintenance instructions

UPFLOW GAS-FIRED
NATURAL-DRAFT FURNACE

394GAD
Series E & F
394GAW
Series F
Sizes 025—200

FILE COPY

Cancels: 40394DP70-A

II 394G-25-1
5/15/89

NOTE: Read the entire instruction before starting the installation.

INTRODUCTION

Before installing the furnace, refer to "Procedures for Natural-Draft Gas-Fired Furnaces" (packaged with the equipment) for information concerning combustion, venting, piping, and other standard installation practices. In the United States, refer to the current edition of the National Fuel Gas Code NFPA No. 54-1988/ANSI Z223.1-1988. Installations made in Canada must comply with the current edition of the National Standard of Canada CAN/CGA-B149.1- and .2-M86 Natural Gas and Propane Gas Installation Codes, and must be in accordance with the provincial authorities having jurisdiction.

Reference should also be made to the regulations of the serving gas supplier and the local building, heating, plumbing, or other codes in effect in the area in which the installation is made.

SAFETY CONSIDERATIONS

Installation and servicing of heating equipment can be hazardous due to gas and electrical components. Only trained and qualified personnel should install, repair, or service heating equipment.

Untrained personnel can perform basic maintenance functions such as cleaning and replacing air filters. All other operations must be performed by trained service personnel. When working on heating equipment, observe precautions in the literature, tags, and labels attached to or shipped with the unit and other safety precautions that may apply.

Follow all safety codes. In the United States, follow all safety codes including the National Fuel Gas Code NFPA No. 54-1988/ANSI Z223.1-1988. In Canada, refer to the current edition of the National Standard of Canada CAN/CGA-B149.1- and .2-M86 Natural Gas and Propane Gas Installation Codes. Wear safety glasses and work gloves. Have fire extinguisher available during startup and adjustment procedures and service call.

Recognized safety information: This is the safety-alert symbol ⚠. When you see this symbol on the furnace and in instructions or manuals, be alert to the potential for personal injury.

TABLE I—CLEARANCES (In Inches)

Sizes	025 thru 075	100 thru 200
Sides—Single-Wall Vent	1	1
Type-B Double-Wall Vent	0	1
Back	0	0
Top of Plenum	1	1
Vent Connector—Single-Wall	6	6
Type-B Double-Wall	1	1
Front—Combustion Air*	6	6
Service	30	30

*The 6-inch front clearance is needed for combustion-air entry and drafthood relief.

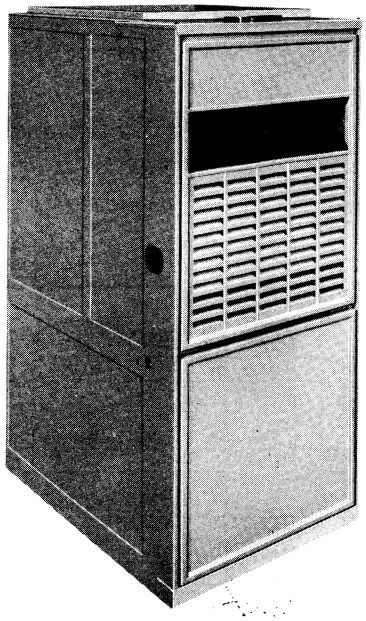

Figure 1—Model 394G

A78482

Understand the signal word—DANGER, WARNING, or CAUTION. These words are used with the safety-alert symbol. DANGER identifies the most serious hazards which **will** result in severe personal injury or death. WARNING on the other hand **could** result in personal injury or death. CAUTION is used to identify unsafe practices, which would result in minor personal injury or product and property damage.

Each furnace is shipped from the factory completely assembled with multispeed direct-drive blower and wired ready for indoor heating installation. All sizes feature a printed-circuit board control center with easy-to-read, 24-volt terminal strip to ensure proper connections.

NOTE: The furnaces covered by these instructions are design-certified for use with the vent damper specified on the furnace rating plate. See instructions packaged with the vent damper for its installation.

⚠ **CAUTION:** Application of this furnace should be indoors with special attention given to vent sizing and material, gas input rate, air temperature rise, and unit sizing. Improper installation or misapplication of the furnace can require excessive servicing or cause premature component failure.

This furnace is designed for a minimum continuous return air temperature of 60 degrees F DB or an intermittent operation down to 55 degrees F DB such as when used with a

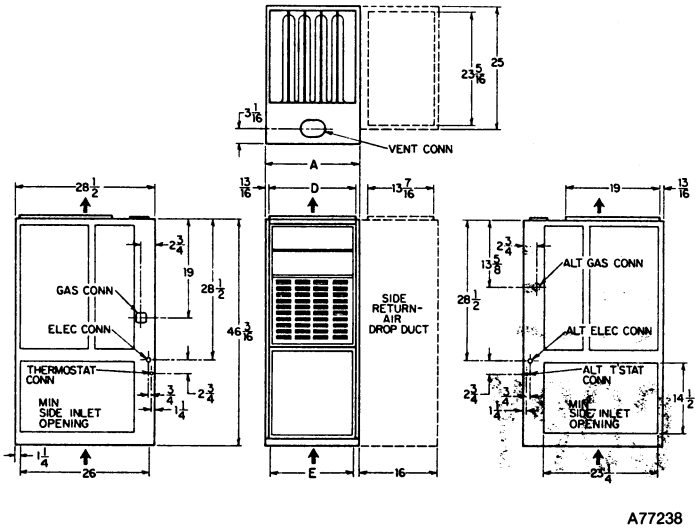

Figure 2—Dimensional Drawing

TABLE II—DIMENSIONS (In Inches)

Size	A	D	E	Vent Conn
024025	14-3/16	12-9/16	11-11/16	3*
000050	14-3/16	12-9/16	11-11/16	4
024050	14-3/16	12-9/16	11-11/16	4
036050	14-3/16	12-9/16	11-11/16	4
000075	14-3/16	12-9/16	11-11/16	4
024075	14-3/16	12-9/16	11-11/16	4
036075	14-3/16	12-9/16	11-11/16	4
000100	17-1/2	15-7/8	15	5
036100	17-1/2	15-7/8	15	5
048100	21	19-3/8	18-1/2	5
000125	21	19-3/8	18-1/2	5
036125	21	19-3/8	18-1/2	5
048125	21	19-3/8	18-1/2	5
060125	24-1/2	22-7/8	22	5
000150	24-1/2	22-7/8	22	6
048150	24-1/2	22-7/8	22	6
060150	24-1/2	22-7/8	22	6
060175	31-1/2	29-7/8	29	7
060200	31-1/2	29-7/8	29	7

*A 4-inch collar is provided for vent damper installation.

TABLE III—RATINGS AND PERFORMANCE

SIZE	Input Btuh*	Capacity‡* 394GAD	394GAW**	394GAW††	Temperature Rise Range	Heating External Static Pressure	Heating Cfm†	Cooling External Static Pressure	Cooling Cfm†	Motor HP & Type	Approx Shipping Wt (lbs)
024025	25,000	—	20,000	—	15—45	0.12	750	0.50	720	1/6 SP	113
000050	50,000	38,000	38,000	39,000	40—70	0.12	700	—	—	1/10 SP	119
024050		38,000	38,000	39,000	40—70	0.12	855	0.50	815	1/6 SP	122
036050		38,000	38,000	39,000	35—65	0.12	815		1170	1/3 SP	127
000075	75,000	57,000	57,000	59,000	55—85	0.12	660	—	—	1/10 SP	124
024075		57,000	57,000	59,000	55—85	0.12	815	0.50	800	1/6 SP	125
036075		57,000	57,000	59,000	45—75	0.12	965		1150	1/3 SP	132
000100	100,000	76,000	76,000	78,000	65—95	0.15	870	—	—	1/6 SP	145
036100		76,000	76,000	78,000	60—90	0.15	1045	0.50	1155	1/3 SP	154
048100		76,000	76,000	78,000	45—75	0.15	1115		1610	1/2 PSC	165
000125	125,000	95,000	96,000	—	70—100	0.20	1050	—	—	1/5 SP	169
036125		95,000	96,000	98,000	65—95	0.20	1160	0.50	1230	1/3 SP	176
048125		95,000	96,000	98,000	60—90	0.20	1180		1550	1/2 PSC	182
060125†		95,000	96,000	98,000	45—75	0.20	1845		2110	1/2 PSC	189
000150	150,000	114,000	115,000	117,000	65—95	0.20	1280	—	—	1/3 SP	203
048150		114,000	115,000	117,000	65—95	0.20	1600	0.50	1600	1/2 PSC	204
060150†		114,000	115,000	117,000	45—75	0.20	1830		2110	1/2 PSC	220
060175†	175,000	—	134,000	137,000	60—90	0.20	1865	0.50	2000	1/2 PSC	271
060200†	200,000	—	153,000	156,000	70—100	0.20	1920	0.50	2060	1/2 PSC	275

*The gas input ratings are certified for elevations to 2000 ft. For elevations above 2000 ft, in the United States, reduce input 4% for each 1000 ft above sea level. In Canada, from 2000 to 4500 ft above sea level, derate the unit 10%.

†Air delivery above 1800 Cfm requires that both sides, or a combination of one side and bottom or bottom only, of the furnace be used for return air.

‡Determined by U.S. Government tests.

**Capacity with uncoated steel heat exchangers.

††Capacity with coated steel heat exchangers.

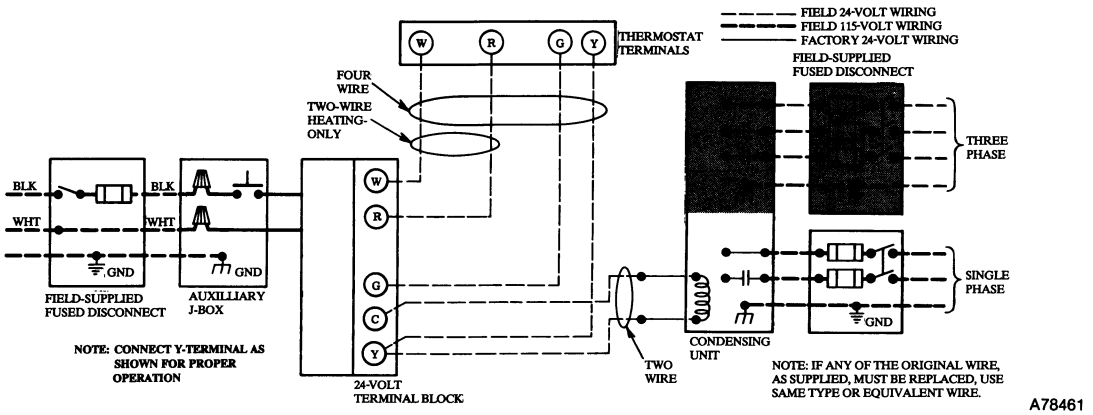

Figure 3—Heating and Cooling Application Wiring Diagram

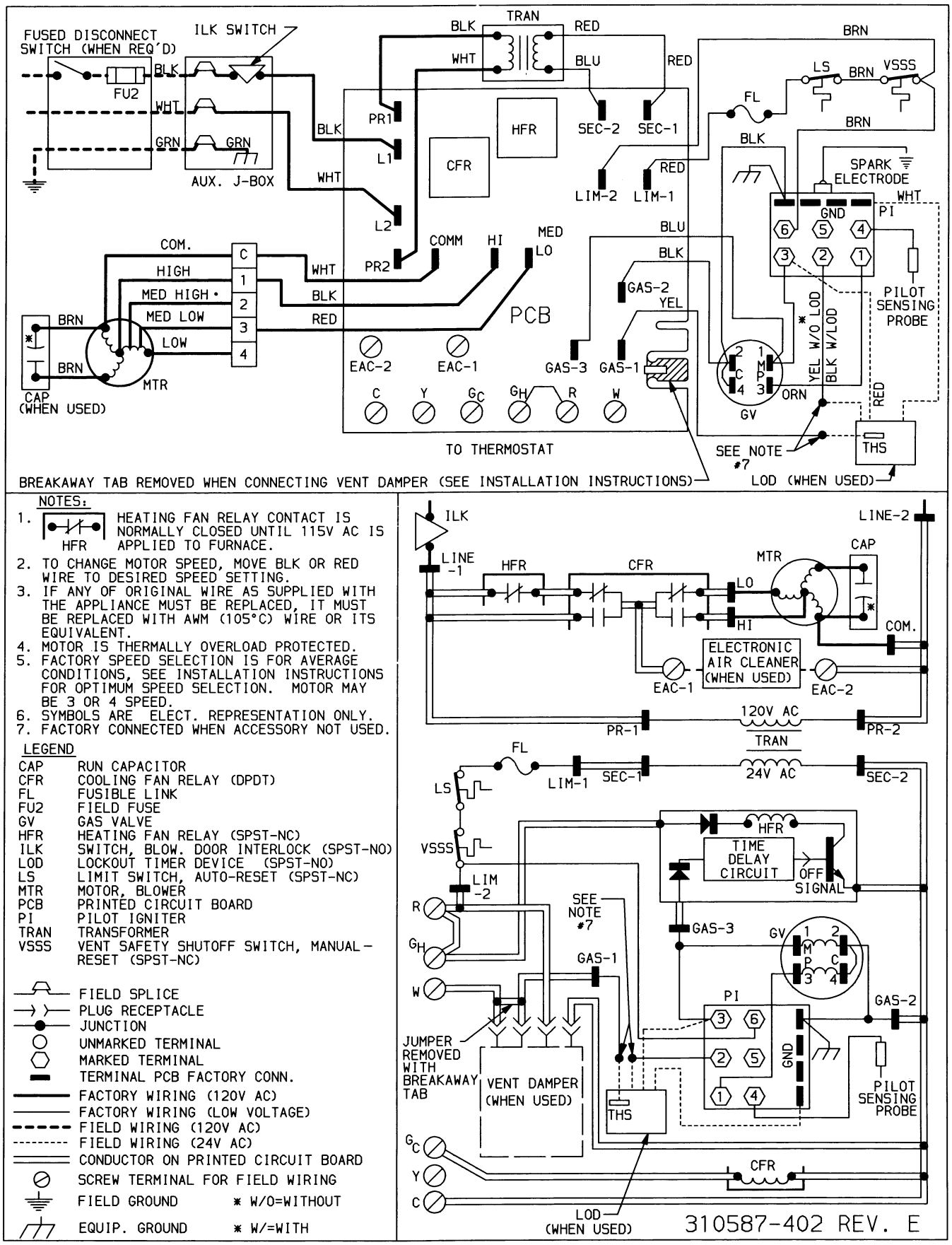

NOTES:

1. HEATING FAN RELAY CONTACT IS NORMALLY CLOSED UNTIL 115V AC IS APPLIED TO FURNACE. (HFR)
2. TO CHANGE MOTOR SPEED, MOVE BLK OR RED WIRE TO DESIRED SPEED SETTING.
3. IF ANY OF ORIGINAL WIRE AS SUPPLIED WITH THE APPLIANCE MUST BE REPLACED, IT MUST BE REPLACED WITH AWM (105°C) WIRE OR ITS EQUIVALENT.
4. MOTOR IS THERMALLY OVERLOAD PROTECTED.
5. FACTORY SPEED SELECTION IS FOR AVERAGE CONDITIONS, SEE INSTALLATION INSTRUCTIONS FOR OPTIMUM SPEED SELECTION. MOTOR MAY BE 3 OR 4 SPEED.
6. SYMBOLS ARE ELECT. REPRESENTATION ONLY.
7. FACTORY CONNECTED WHEN ACCESSORY NOT USED.

LEGEND

CAP	RUN CAPACITOR
CFR	COOLING FAN RELAY (DPDT)
FL	FUSIBLE LINK
FU2	FIELD FUSE
GV	GAS VALVE
HFR	HEATING FAN RELAY (SPST-NC)
ILK	SWITCH, BLOW. DOOR INTERLOCK (SPST-NO)
LOD	LOCKOUT TIMER DEVICE (SPST-NO)
LS	LIMIT SWITCH, AUTO-RESET (SPST-NC)
MTR	MOTOR, BLOWER
PCB	PRINTED CIRCUIT BOARD
PI	PILOT IGNITER
TRAN	TRANSFORMER
VSSS	VENT SAFETY SHUTOFF SWITCH, MANUAL-RESET (SPST-NC)

FIELD SPLICE
PLUG RECEPTACLE
JUNCTION
UNMARKED TERMINAL
MARKED TERMINAL
TERMINAL PCB FACTORY CONN.
FACTORY WIRING (120V AC)
FACTORY WIRING (LOW VOLTAGE)
FIELD WIRING (120V AC)
FIELD WIRING (24V AC)
CONDUCTOR ON PRINTED CIRCUIT BOARD
SCREW TERMINAL FOR FIELD WIRING
FIELD GROUND — * W/O=WITHOUT
EQUIP. GROUND — * W/=WITH

A89172

Figure 4—Wiring Diagram for Sizes 175 and 200 (IID Pilot)

thermostat night setback. Return air temperature must not exceed a maximum of 85 degrees F DB.

⚠ WARNING: Improper installation, adjustment, alteration, service, maintenance, or use can cause carbon monoxide poisoning, explosion, fire, electrical shock, or other conditions which may cause personal injury or property damage. Consult a qualified installer, service agency, local gas supplier or your distributor or branch for information or assistance. The qualified installer or agency must use only factory-authorized and listed kits or accessories when modifying this product. A failure to adhere to this warning can cause electrical shock, fire, personal injury, or death.

⚠ CAUTION: Do not install furnace in a damp, corrosive, or contaminated atmosphere. Make sure all combustion and circulating air requirements listed in "Procedures for Natural-Draft Gas-Fire Furnaces" are adhered to, in addition to all local codes and ordinances.

Do not use this furnace during construction when adhesives, sealers and/or new carpets are being installed. If the furnace is required during construction, use clean outside air for combustion and ventilation. Compounds of chlorine and flourine when burned with combustion air form acids which will cause corrosion of the heat exchangers and metal vent system. Some of these compounds are paneling and dry wall, adhesives, paints, thinners, masonry cleaning materials, and many other solvents commonly used in the construction process.

The design of the upflow gas-fired furnace is A.G.A. and CGA certified for installation on combustible flooring, in alcoves, attics, basements, closets, or utility rooms. The design of this furnace line is *not* A.G.A. or CGA certified for installation in a mobile home, recreation vehicle, or outdoors.

⚠ CAUTION: Do not use the rear of the furnace for a return-air duct connection. Use the side(s) and/or bottom only. Air delivery above 1800 cfm requires that both sides of the furnace be used, or a combination of one side and the bottom, or the bottom only.

Installation comprises the following:

*I. Inspection
*II. Canadian Installation
*III. Location, Ventilation, and Air for Combustion
*IV. Gas Piping
*V. Venting
VI. Electrical
VII. Sequence of Operation
VIII. Filter, Bottom Closure, and Leveling Legs
IX. Startup and Adjustment
X. Care and Maintenance

*To perform these sections (or installation steps), refer to the appropriate sections of "Procedures for Natural-Draft Gas-Fired Furnaces" booklet packaged with this unit.

For accessory installation details, refer to applicable installation literature. Terminals EAC-1 and EAC-2 in the control box are for direct connection of an electronic air cleaner.

VI. ELECTRICAL CONNECTIONS

A. 115-Volt Wiring

NOTE: Refer to "Procedures for Natural-Draft Gas-Fired Furnaces" (packaged with the furnace) for additional information.

⚠ CAUTION: Do not connect aluminum wire between disconnect switch and furnace. Use only copper conductors.

See Figure 3 for wiring diagram showing the proper field 115- and 24-volt wiring.

Use a separate fused branch electrical circuit containing a properly sized fuse or circuit breaker for this furnace. A disconnecting means must be located within sight from, and readily accessible to, the furnace. The blower door switch may be acceptable in some areas as a disconnecting means.

The auxiliary J-box can be moved to the right-hand side of furnace when a right-hand power supply is desired.

1. Remove two screws holding auxiliary J-box.
2. Drill two holes in same position on opposite side and mount auxiliary J-box.
3. Plug or cap unused electrical entry holes in left side of casing.

If 115-volt wiring to the unit is encased in a nonmetallic sheath, connect the incoming ground wire to the grounding wire inside the furnace J-box. If metallic conduit is used, it will serve as the ground.

B. 24-Volt Wiring

Make field 24-volt connections at the 24-volt terminal strip. See Figure 3.

NOTE: Use AWG No. 18 "color-coded" copper thermostat wire for lengths up to 100 ft. Above 100 ft, use AWG No. 16 wire.

IMPORTANT: The thermostat heat anticipation must be set to match the amp draw of the gas valve and electrical components in the R-W circuit. Accurate amp draw readings can be obtained at thermostat subbase terminals R & W. Figure 16 illustrates an easy method of obtaining the actual amp draw.

The room thermostat should be located where it will be in the natural circulation path of room air. Avoid locations where the thermostat would be exposed to cold-air infiltration, drafts from windows, doors, or other openings leading to the outside, or exposure to air currents from warm- or cold-air registers; or to exposure where the natural circulation of the air is cut off—such as behind doors, above or below mantels, shelves, etc.

The thermostat should not be exposed to heat from nearby fireplaces, radios, televisions, lamps, or rays from the sun.

Nor should the thermostat be mounted on a wall containing pipes or warm-air ducts, or a flue or vent that could affect its operation and prevent it from properly controlling the room temperature. Any hole in the plaster or panel through which the wires pass from the thermostat should be adequately sealed with suitable material to prevent drafts from affecting the thermostat.

C. Blower Control Center

Each furnace features a printed-circuit control center. This will aid the installer and serviceman when installing and servicing the unit. A 24-volt terminal board is marked for easy connection of field wiring.

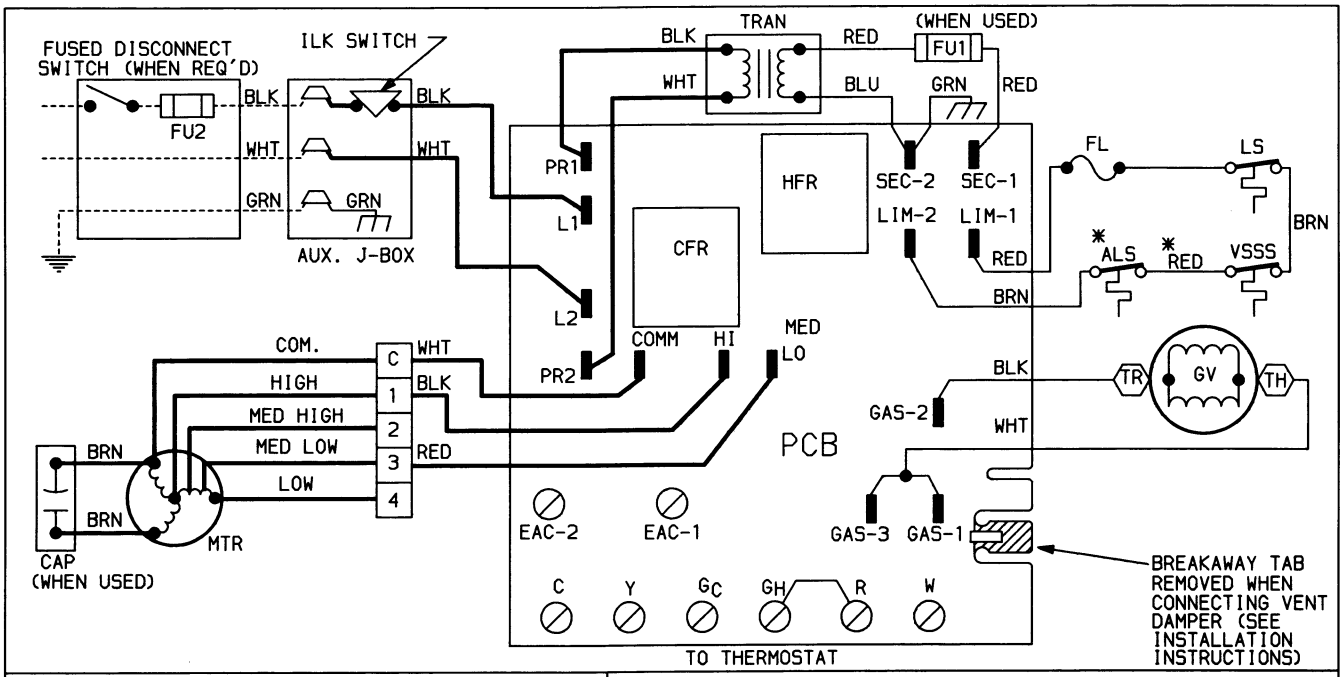

NOTES:

✱ DOWNFLOW FURNACES ONLY

1. HFR — HEATING FAN RELAY CONTACT IS NORMALLY CLOSED UNTIL 115V AC IS APPLIED TO FURNACE.
2. TO CHANGE MOTOR SPEED, MOVE BLK OR RED WIRE TO DESIRED SPEED SETTING.
3. IF ANY OF ORIGINAL WIRE AS SUPPLIED WITH THE APPLIANCE MUST BE REPLACED, IT MUST BE REPLACED WITH AWM (105°C) WIRE OR ITS EQUIVALENT.
4. MOTOR IS THERMALLY OVERLOAD PROTECTED.
5. FACTORY SPEED SELECTION IS FOR AVERAGE CONDITIONS, SEE INSTALLATION INSTRUCTIONS FOR OPTIMUM SPEED SELECTION. MOTOR MAY BE 3 OR 4 SPEED.
6. SYMBOLS ARE AN ELECTRICAL REPRESENTATION ONLY.

LEGEND

ALS	AUXILIARY LIMIT SWITCH, MANUAL-RESET (SPST-NC)
CAP	RUN CAPACITOR
CFR	COOLING FAN RELAY (DPDT)
FL	FUSIBLE LINK
FU1	FUSE IN LINE 2 AMP
FU2	FIELD FUSE
GV	GAS VALVE
HFR	HEATING FAN RELAY (SPST-NC)
ILK	SWITCH, BLOWER DOOR INTERLOCK (SPST-NO)
LS	LIMIT SWITCH, AUTOMATIC-RESET (SPST-NC)
MTR	MOTOR, BLOWER
PCB	PRINTED CIRCUIT BOARD
TRAN	TRANSFORMER
VSSS	VENT SAFETY SHUTOFF SWITCH, MANUAL-RESET (SPST-NC)

FIELD SPLICE
PLUG RECEPTACLE
JUNCTION
MARKED TERMINAL
UNMARKED TERMINAL
TERMINAL PCB FACTORY CONN.
FACTORY WIRING (120V AC)
FACTORY WIRING (LOW VOLTAGE)
FIELD WIRING (120V AC)
CONDUCTOR ON PRINTED CIRCUIT BOARD
SCREW TERMINAL FOR FIELD WIRING
FIELD GROUND
EQUIP. GROUND

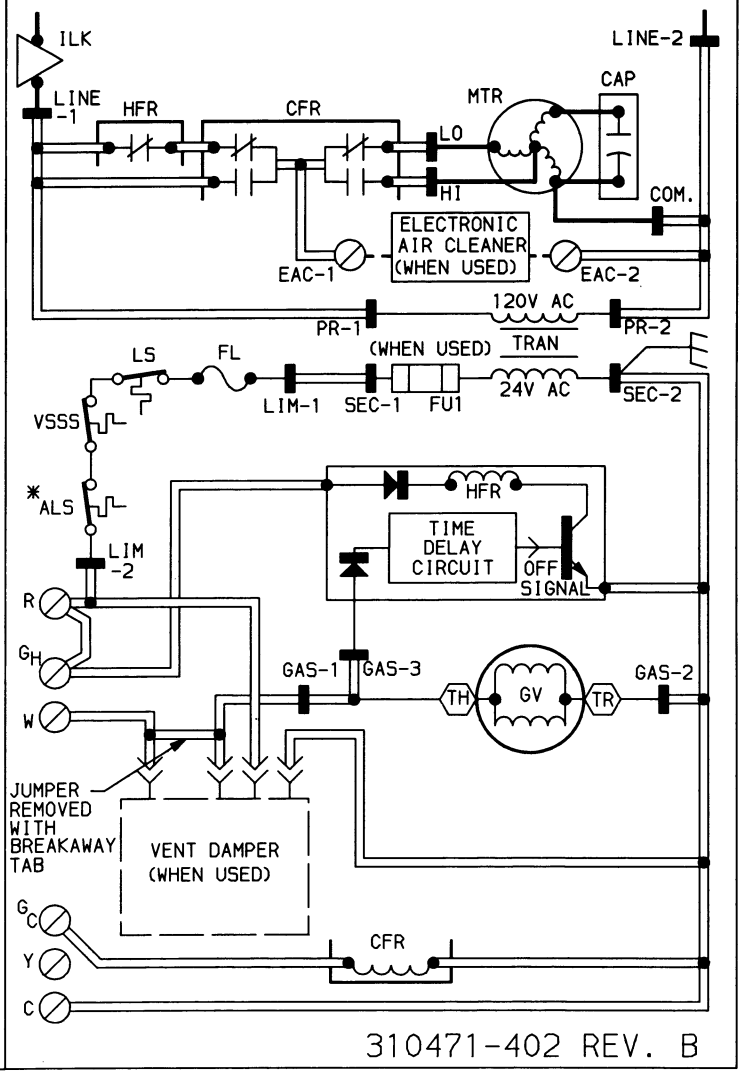

A89167

Figure 5—Wiring Diagram for Sizes 050 thru 150 (Match-lit Pilot)

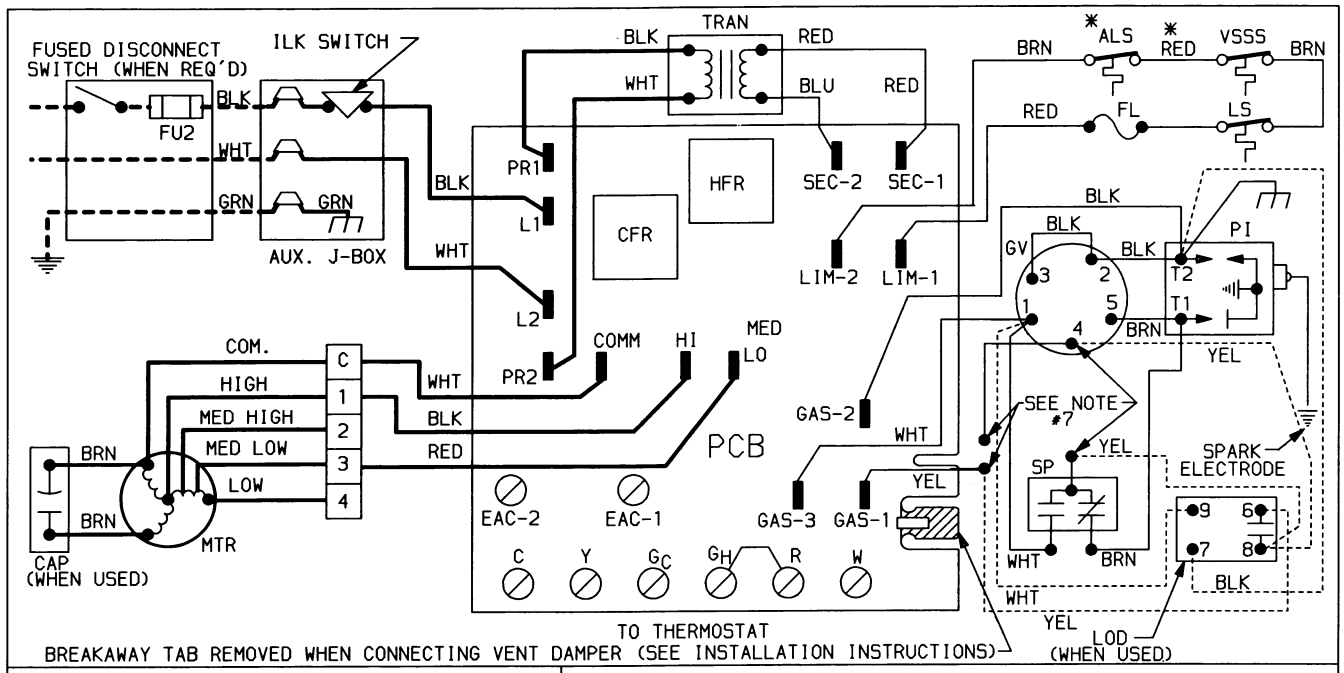

NOTES:

* DOWNFLOW FURNACES ONLY
1. HFR — HEATING FAN RELAY CONTACT IS NORMALLY CLOSED UNTIL 115V AC IS APPLIED TO FURNACE.
2. TO CHANGE MOTOR SPEED, MOVE RED WIRE TO DESIRED SPEED SETTING.
3. IF ANY OF ORIGINAL WIRE AS SUPPLIED WITH THE APPLIANCE MUST BE REPLACED, IT MUST BE REPLACED WITH AWM (105°C) WIRE OR ITS EQUIVALENT.
4. MOTOR IS THERMALLY OVERLOAD PROTECTED.
5. FACTORY SPEED SELECTION IS FOR AVERAGE CONDITIONS, SEE INSTALLATION INSTRUCTIONS FOR OPTIMUM SPEED SELECTION. MOTOR MAY BE 3 OR 4 SPEED.
6. SYMBOLS ARE ELECT. REPRESENTATION ONLY.
7. FACTORY CONNECTED WHEN ACCESSORY NOT USED.

LEGEND

ALS	AUXILIARY LIMIT SWITCH, MANUAL-RESET (SPST-NC)
CAP	RUN CAPACITOR
CFR	COOLING FAN RELAY (DPDT
FL	FUSIBLE LINK
FU2	FIELD FUSE
GV	GAS VALVE
HFR	HEATING FAN RELAY (SPST-NC)
ILK	SWITCH, BLOW. DOOR INTERLOCK (SPST-NO)
LOD	LOCKOUT TIMER DEVICE (SPST-NO)
LS	LIMIT SWITCH, AUTO.-RESET (SPST-NC)
MTR	MOTOR, BLOWER
PCB	PRINTED CIRCUIT BOARD
PI	PILOT IGNITER
SP	SAFETY PILOT (FLAME SENSING)
TRAN	TRANSFORMER
VSSS	VENT SAFETY SHUTOFF SWITCH, MANUAL-RESET (SPST-NC)

FIELD SPLICE
PLUG RECEPTACLE
JUNCTION
UNMARKED TERMINAL
TERMINAL PCB FACTORY CONN.
FACTORY WIRING (120V AC)
FACTORY WIRING (LOW VOLTAGE)
FIELD WIRING (120V AC)
FIELD WIRING (24V AC)
CONDUCTOR ON PRINTED CIRCUIT BOARD
SCREW TERMINAL FOR FIELD WIRING
FIELD GROUND
EQUIP. GROUND

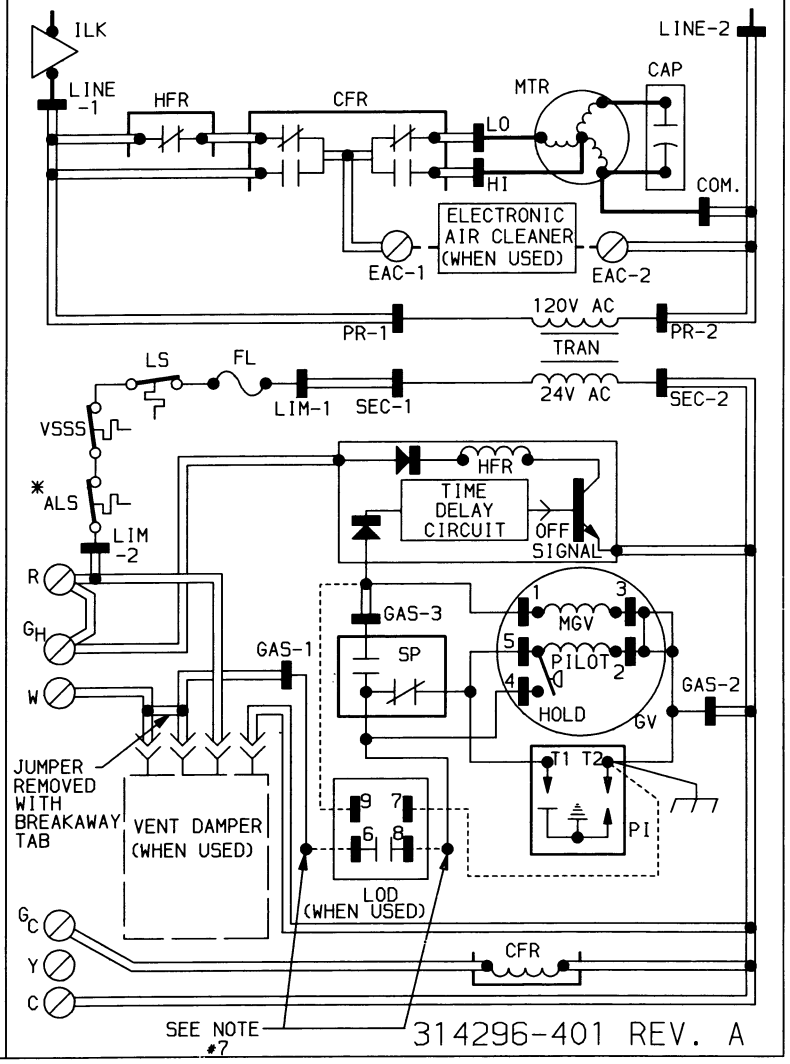

A89168

Figure 6—Wiring Diagram for Sizes 025 thru 150 (IID Pilot)

VII. SEQUENCE OF OPERATION

NOTE: The wiring diagrams shown in Figures 4, 5, and 6 are heating/cooling.

A. Heating

Gas and electrical supplies must be turned on at the furnace.

NOTE: When power is applied to heat relay coil HFR in the control circuit, the normally-closed contacts in the supply circuit will open.

1. White Rogers 36E Gas Valves (IID Models, 025 thru 150 sizes). See Figure 6.

When the thermostat "calls for heat," the circuit is closed between terminals R and W. Power from transformer TRAN through fusible link FL, limit switch LS, and vent shut-off switch VSSS, energizes the pilot valve part of automatic gas valve GV and pilot igniter PI. The pilot valve opens, permitting gas flow to the pilot burner where it is ignited.

The pilot valve portion of automatic gas valve GV has a "pick" solenoid coil and latching "hold' device. The "pick" coil must be energized to open the pilot valve, but only the "hold" device must be energized to keep it open.

The "hold" device varies with the gas valve design used on the furnace. It could be an internal pressure switch in series with the "pick" solenoid coil, an internal electrical resistor in series with the solenoid "pick" coil, or a separate electrical solenoid coil.

When the pilot flame is established, safety pilot SP switches its contacts in approximately 40 to 60 seconds, energizing the main valve portion of gas valve GV and deenergizing safety pilot igniter SP and the "pick" coil of the pilot solenoid portion in gas valve GV. The pilot valve is held open by the "hold" device within gas valve GV.

The main valve portion of gas valve GV has a delayed opening operator that opens within 6 to 15 seconds after it is energized, permitting gas flow to the main burners where the gas is ignited by pilot SP.

2. White Rodgers 36C Gas Valves (IID Models, 175 and 200 sizes). See Figure 4.

When the thermostat "calls for heat," the circuit is closed between terminals R and W. Power from transformer TRAN through fusible link FL, limit switch LS, and vent safety shut-off switch VSSS energizes the pilot valve portion of automatic gas valve GV and pilot igniter PI. The pilot valve opens, permitting gas flow to the pilot burner, where it is ignited at the spark electrode. When flame is sensed at the pilot sensing probe, pilot igniter PI energizes the main gas valve, permitting gas flow to the main burners where the gas is ignited by the pilot burner flame.

3. Honeywell VR800A and VR8200H Gas Valves (Match-Lit Models). See Figure 5.

The furnace pilot must be lit to energize the thermal magnet circuit of gas valve GV, thus permitting gas flow to the remaining portion of the valve.

When the thermostat "calls for heat," the circuit is closed between terminals R and W. Power from transformer TRAN through fusible link FL, limit switch LS, and vent safety shut-off switch VSSS energizes gas valve GV, causing the valve to open and permitting gas flow to the main burners, where it is ignited by the pilot.

4. Blower Circuit

With power through the solid-state time-delay circuit on printed-circuit board PCB and heat relay HFR, blower motor MTR is energized on heating speed approximately 75 seconds after gas valve GV has been energized (or the pilot flame has been proven in the case of IID systems).

5. Limit Control

If the furnace overheats for any reason, limit control LS switches, breaking the circuit to automatic gas valve GV. The gas valve closes immediately, stopping gas flow to the main burners and the pilot. In addition, blower motor MTR continues to operate because heat relay HFR is deenergized to cool down the furnace.

Fusible link FL is provided in the transformer TRAN secondary circuit as protection from overheating conditions in the vestibule area of the furnace. Should overheating occur, the fuse opens and deenergizes gas valve GV and heat relay HFR, stopping the gas flow to the burners and starting blower motor MTR.

When the thermostat is satisfied, the circuit between R and W is broken, deenergizing automatic gas valve GV, pilot SP, (when used), and the solid-state time-delay circuit on the printed-circuit board. The gas flow stops immediately to the pilot and main burners with the IID controls and to the main burners only with standing pilot controls. After

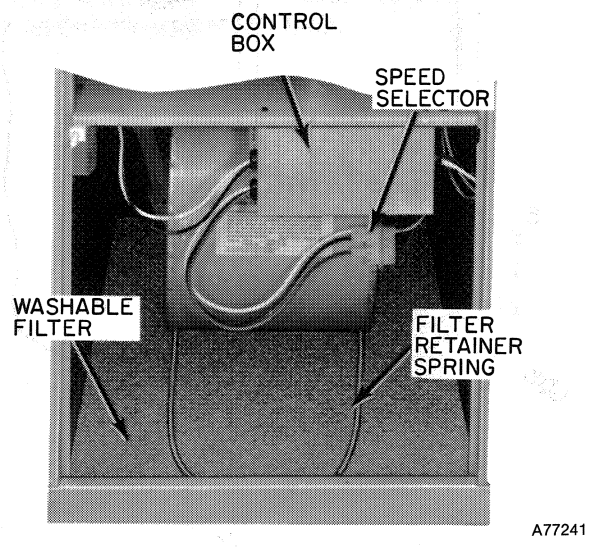

Figure 7—Filter Installed for Bottom Inlet

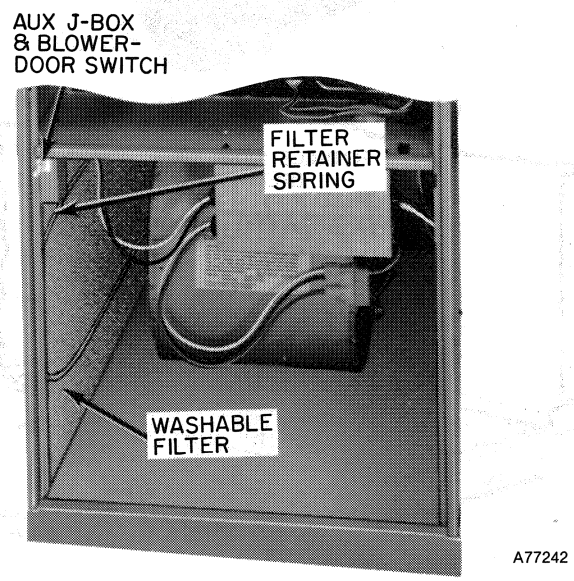

Figure 8—Filter Installed for Side Inlet

approximately 105 seconds, heat relay HFR is energized and blower motor MTR stops.

6. Vent Safety Shut-off Switch

The purpose of this control is for safety shutdown of the furnace if a completely blocked vent condition occurs.

During a blocked vent condition, temperature in the drafthood opening will rise causing vent safety shut-off switch to open, breaking the circuit to gas valve GV system. The gas valve closes immediately, stopping gas flow to the main burners and pilot, and the blower will run continuously.

The furnace will remain in this mode until the vent safety shut-off system switch is manually reset.

B. Vent Damper (when used)

With gas and electrical power supplied to the furnace, the vent damper motor is deenergized, and the vent damper is closed until the thermostat calls for heat.

On a "call for heat" by the thermostat, the vent damper motor is energized and the damper opens. When the vent damper reaches the full-open position, the damper motor is deenergized and a circuit is completed to the main gas valve via the pilot. At this time, the main gas valve is energized and the main burners are ignited; the vent damper will remain open until the thermostat is satisfied.

When the thermostat is satisfied, it will deenergize the main gas valve and stop the gas flow. The vent damper motor will energize and close the damper. When the vent damper reaches the full-closed position, the damper motor is deenergized and will remain so until the next "call for heat" by the thermostat.

C. Cooling (Cooling Models Only)

When the thermostat "calls for cooling," power from transformer TRAN energizes the condensing unit contactor, starting the condensing unit. Simultaneously, cooling relay coil CFR is energized, closing its contacts and energizing blower motor MTR on its cooling speed. It continues to operate until the thermostat is satisfied.

When the thermostat is satisfied, the circuit to terminal Gc is broken, deenergizing cooling relay coil CFR which, in turn, opens its contacts, stopping blower motor MTR.

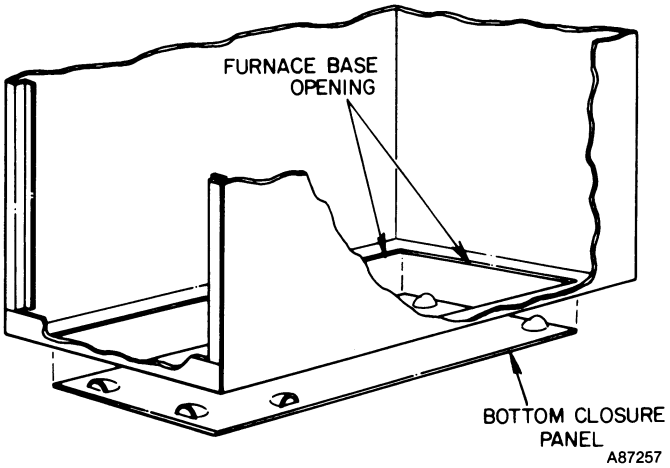

Figure 9—Installing Bottom Closure Panel

VIII. FILTER

A. Filter Arrangement

⚠ CAUTION: Air delivery above 1800 cfm, or systems with a total static pressure drop above 0.5 in. wc, require that both sides, or a combination of one side and the bottom, or the bottom only, of the furnace be used for return air. When both sides of the furnace are used for return air, an extra filter and retainer spring is required.

The filter is factory-installed in the bottom of the furnace. This is for bottom inlet application. See Figure 7.

NOTE: The filter shipped with the 14-3/16-inch furnace casing is too wide and must be trimmed to properly fit the bottom opening.

For side inlet application, see Figure 2 for the minimum opening size. Remove the filter and retainer spring from the bottom opening. Install the retainer spring in the holes provided—one in the blower deck and the other in the retainer spring bracket. Install the filter (The filter must be trimmed to clear the J-box on some sizes.) as shown in Figure 8.

⚠ CAUTION: Be sure the filter retainer spring is behind the flange of the casing side.

This appliance shall *not* be installed directly on carpeting, tile, or combustible material other than wood flooring.

B. Bottom Closure Panel

When the side inlet(s) is used, the bottom opening must be properly sealed by installing a bottom closure panel. After the filter has been installed for side return, perform the following steps:

1. Position bottom closure panel so that it appears as shown in Figure 9.

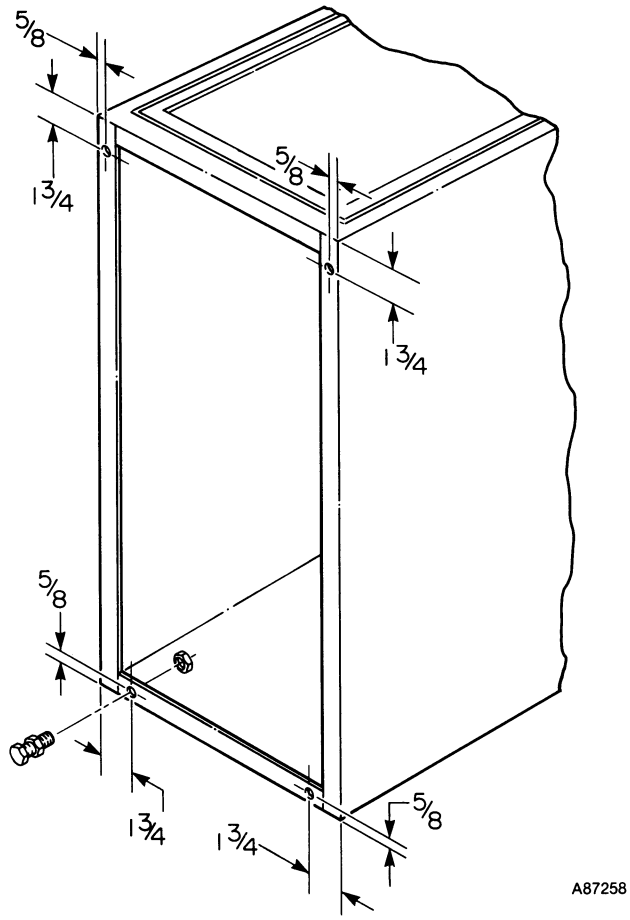

Figure 10—Leveling Leg Installation

2. With furnace either tilted or raised, install panel in bottom opening of furnace. See Figure 9. (Install from bottom side of furnace.)

> ⚠ **WARNING:** Never operate unit without a filter or with filter access door removed. A failure to adhere to this warning can cause a fire, physical injury, or death.

C. Leveling Legs (If Required)

When the furnace is used with side inlet(s), and leveling legs are required, refer to Figure 10, and install field-supplied corrosion-resistant 5/16-inch machine bolts and nuts.

NOTE: The maximum length of the bolt should not exceed 1-1/2 inches.

1. Lay furnace on its back, locate and drill 5/16-inch diameter hole in each bottom corner of furnace as shown in Figure 10.
2. Install nut on bolt and install bolt and nut in hole. (Install flat washer if desired.)
3. Install another nut on other side of furnace base. (Install flat washer if desired.)
4. Adjust outside nut to provide desired height, and tighten inside nut to secure arrangement.

IX. STARTUP AND ADJUSTMENT

In addition to the following information, refer to "Procedures for Natural-Draft Gas-Fired Furnaces" packaged with the unit.

NOTE: The furnace blower door must be in place to complete 115-volt circuit to the furnace.

> ⚠ **CAUTION:** This furnace is equipped with a fusible link in the vestibule area that will melt if an overheating condition caused by an inadequate combustion-air supply or improper venting practices develops. *Do not* jumper this fuse. Correct the condition and replace the fuse with an identical part.

The gas service pressure must not exceed 0.5 psig (14 in. wc).

NOTE: The gas valve regulator has been factory-set at 3.5 in. wc for natural gas. Refer to "Procedures for Natural-Draft Gas-Fired Furnaces" for readjusting when checking input.

A. Adjustment of Blower Speed

> ⚠ **WARNING:** Disconnect the electrical power before changing the speed tap. A failure to adhere to this warning can cause personal injury.

To change motor speed taps, remove the motor tap lead (See Figure 7 and Table IV.) and relocate it on the desired terminal on the plug-in terminal block/speed selector located on the blower.

> ⚠ **CAUTION:** When adjusting the blower speed, make certain that the temperature rise across the heat exchanger does not exceed that specified on the rating plate.

TABLE IV—SPEED SELECTOR

Speed	Tap No.*†
Common	C
Hi	1
Med-Hi	2
Med-Low	3
Low	4

*Furnaces without a cooling fan relay are equipped with a 3-speed motor.

†White wire from control box to common; black wire from control box to cooling speed selection; red wire from control box to heating speed selection.

B. Automatic Gas Control Valve

These units are equipped with an automatic gas control valve. If not already checked when lighting the main burner, check the proper operation of this valve by moving the room thermostat pointer above and below the room temperature and observing that the main burners light on "call for heat" and go off when the pointer is moved below the room temperature setting.

NOTE: For ease of adjusting the IID pilot flame, disconnect one power lead at main gas valve. For Model 36C or 36E Gas Valve, disconnect terminal No. 1; and for Model VR 800A or VR8200H Gas Valve, turn manual valve knob to PILOT. This will prevent main burner ignition and allow time to adjust the pilot. Reconnect the power lead or turn manual valve knob to ON after adjustment.

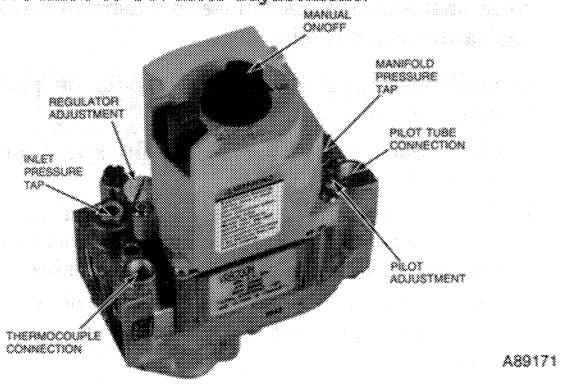

Figure 12—Honeywell Model VR8200H

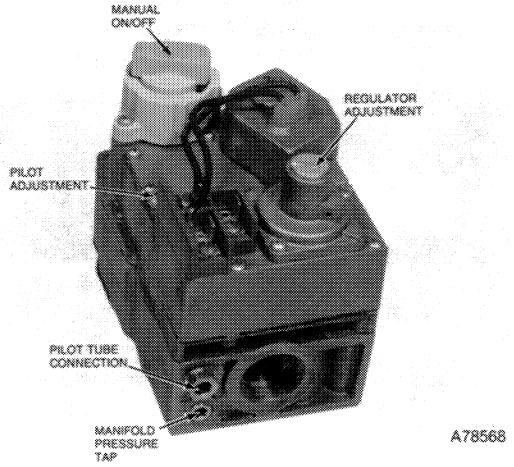

Figure 11—Honeywell Model VR800A

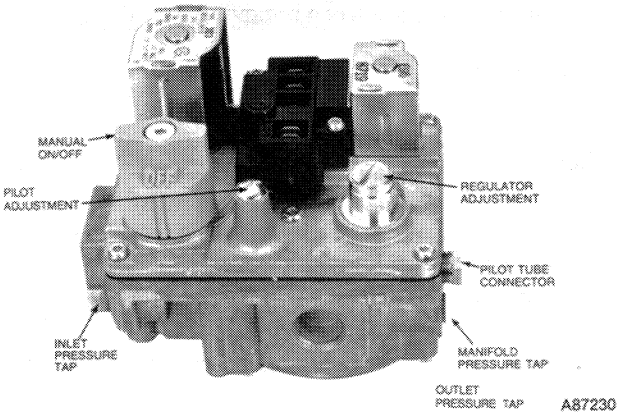

Figure 13—White Rodgers Model 36

⚠ **CAUTION:** Be sure to follow startup and pilot safety check procedures as outlined in "Procedures for Natural-Draft Gas-Fired Furnaces" instructions packaged with the equipment.

X. CARE AND MAINTENANCE

⚠ **CAUTION:** Because of possible damage to the equipment or personal injury, maintenance should be performed by qualified persons only.

⚠ **WARNING:** Never store anything on, or in contact with, the furnace, such as:

1. Spray or aerosol cans, rags, brooms, dust mops, vacuum cleaners, or other cleaning tools.
2. Soap powders, bleaches, waxes or other cleaning compounds, plastic or plastic containers, gasoline, kerosene, cigarette lighter fluid, dry cleaning fluids, or other volatile fluids.
3. Paint thinners and other painting compounds, paper bags or other paper products.

A failure to adhere to this warning can cause a fire, physical injury, or death.

For continuing high performance, and to minimize possible equipment failure, it is essential that periodic maintenance be performed on this equipment. Consult your local Dealer as to the proper frequency of maintenance and the availability of a maintenance contract.

The ability to properly perform maintenance on this equipment requires certain mechanical skills and tools. If you do not possess these, contact your Dealer for maintenance.

⚠ **WARNING:** Turn off gas and electrical supplies to unit before performing any maintenance or service. Follow relighting instructions on label attached to the front of the furnace. A failure to adhere to this warning can cause personal injury.

The minimum maintenance that should be performed on this equipment is as follows:

1. Check and clean or replace air filter each month or as required.
2. Check blower motor and wheel for cleanliness and lubrication (when oilers are provided) each heating and cooling season. Clean and lubricate as necessary.
3. Check electrical connections for tightness and controls for proper operation each heating season. Service as necessary.

⚠ **WARNING:** As with any mechanical equipment, personal injury can result from sharp metal edges, etc.; therefore, be careful when removing parts.

A. Air Filter

Remember to disconnect electrical power before removing access panels. To clean or replace air filter, proceed as follows:

1. Remove blower access door.
2. Push filter retainer toward back of furnace until it clears flange on furnace casing.
3. Slide out filter.
4. Clean filter with tap water.
5. Rinse and let dry. Oiling or coating of filter is not required.
6. Place filter in furnace with cross-sectional binding up or facing blower.

B. Blower Motor and Wheel

For long life, economy, and high efficiency; clean accumulated dirt and grease from blower wheel and motor annually.

When oilers are provided, lubricate motor every 5 years if motor is used on intermittent operation (thermostat FAN switch in AUTO position), or every 2 years if motor is in continuous operation (thermostat FAN switch in ON position).

Remember to disconnect electrical supply before removing access panels.

Clean and lubricate as follows:

1. Remove access panels.
2. Remove control box from bottom side of blower deck and lay it on top side. (Two clips are provided on back side of control box for hanging box on blower deck flange when desired.)
3. Remove electrical leads from numbered side of Molex speed selector. See Figure 7 and Table IV. Note location of wires for reassembly.
4. Remove screws holding blower assembly against blower deck and slide blower assembly out of furnace.
5. Squeeze side tabs of Molex speed selector and pull it from blower housing.
6. Loosen a screw in strap holding motor capacitor to blower housing and slide capacitor from under strap.
7. Mark blower wheel(s), motor, and motor support in relation to blower housing(s) before disassembly, to insure proper reassembly.
8. Loosen setscrew holding blower wheel(s) onto motor shaft.
9. Remove bolts holding motor mount to blower housing and slide motor and mount out of housing. Some motors have a ground wire attached to blower housing; disconnect it also.
10. Lubricate motor (when oilers are provided).
    a. Remove dust caps or plugs from oil ports located at each end of motor.
    b. Use a good grade of SAE 20 nondetergent motor oil and put one teaspoon, 5 cc, 3/16 oz, or 16 to 25 drops in each oil port.
    c. Allow time for total quantity of oil to be absorbed by each bearing.
    d. After oiling motor, be sure to wipe excess oil from motor housing.
    e. Replace dust cap or plugs on oil ports.

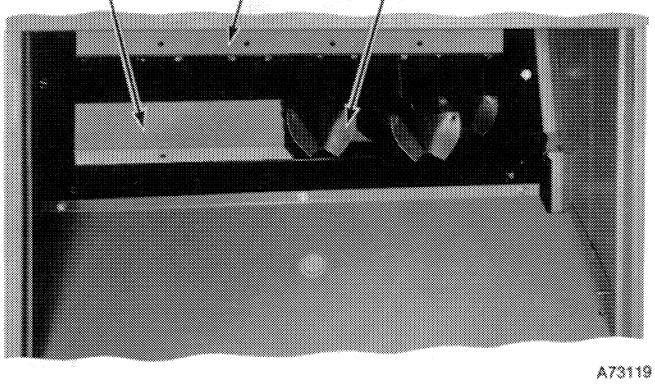

Figure 14—Removing Baffles

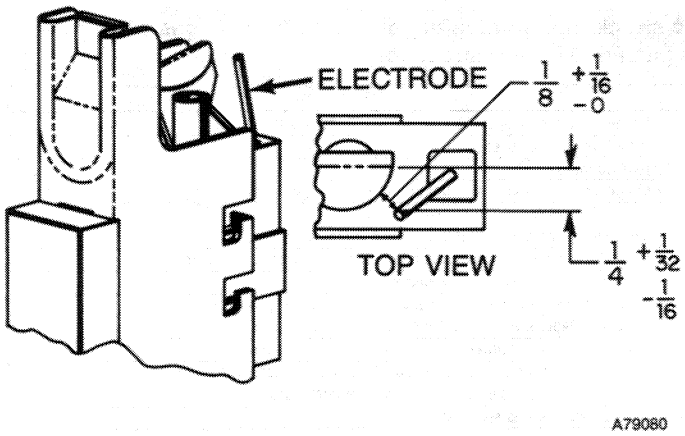

Figure 15—Position of Electrode to Pilot

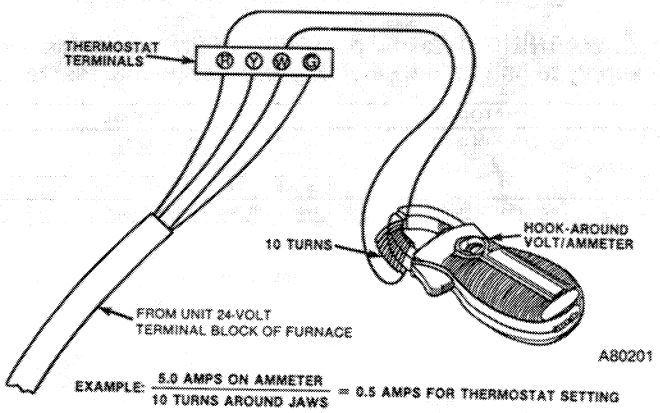

Figure 16—Amp Draw Check With Ammeter

11. Remove blower wheel(s) from housing.
    a. Mark blower wheel(s) orientation and cutoff location to insure proper reassembly.
    b. Remove screws holding cutoff plate and remove cutoff plate from housing.
    c. Lift blower wheel(s) from housing through opening.
12. Clean blower wheel(s) and motor by using vacuum with soft brush attachment. Care must be exercised not to disturb balance weights (clips) on blower wheel vanes. Also do not drop or bend wheel, as balance will be affected.
13. Reassemble blower by reversing procedures 11a thru c. Be sure wheel is positioned for proper rotation.
14. Reassemble motor and blower by reversing procedures 5 thru 9. If motor has ground wire, be sure it is connected as before. Be sure the blower wheel setscrew is on the flat of the motor shaft when tightening the setscrew.
15. Reinstall blower assembly in furnace.
16. Connect electrical leads to Molex speed selector. Please note that connections are polarized for assembly—**do not force.**
17. Reinstall control box on bottom side of blower deck.
18. Turn on electrical power and check for proper rotation and speed changes between heating and cooling.

C. Cleaning Heat Exchanger

If it becomes necessary to clean the heat exchanger because of carbon deposits, soot, etc., proceed as follows:

1. Turn off gas and electrical supply.
2. Remove access panels.
3. Remove vent connector and draft diverter. Screws are located inside draft diverter opening.
4. Remove flue chokes (two across flue outlets) and baffles from flue outlets of heat exchanger. See Figure 14.
5. Remove secondary-air baffle and burners. To remove pilot burner, disconnect pilot supply tube at gas valve.
6. Clean flue ways with brush and/or vacuum. Check heat exchanger for leaks and cracks. Replace if necessary.
7. Using vacuum cleaner with soft brush attachment, clean burners. After cleaning, reinstall burners.
8. Replace flue baffles and chokes. Be sure all screws are in place and tight.
9. Replace draft diverter and vent connector. Be sure screws are replaced and tight.
10. Replace secondary-air baffle and burners.
11. Turn on gas and electricity. Check for gas leaks.

⚠ WARNING: Never use a match or other open flame to check for gas leaks. Use a soap-and-water solution. A failure to adhere to this warning can cause a fire, personal injury, or death.

D. Pilot

Check the pilot and clean if necessary at the beginning of each heating season. The pilot flame should be high enough for proper impingement of the safety element and to light the burners. Remove the accumulation of soot and carbon from the thermocouple, safety element, or sensing probe.

E. Electrical Controls and Wiring

NOTE: There may be more than one electrical supply to unit.

With power disconnected to unit, check all electrical connections for tightness. Tighten all screws on electrical connections. If any smoky or burned connections are noticed, disassemble the connection, clean all parts and stripped wire, and reassemble properly and securely. Electrical controls are difficult to check without proper instrumentation; therefore, reconnect electrical power to unit and observe unit through one complete operating cycle. If there are any discrepancies in the operating cycle, contact your Dealer and request service.

TABLE V—TROUBLE ANALYSIS CHART

⚠ WARNING: To avoid possibility of fire, explosion, electric shock, personal injury or death, turn off gas and power supply to unit before servicing (unless specific test requires gas and electric supplies).

SYMPTOM	CAUSE	REMEDY
Furnace will not operate	No 115-volt power to furnace	Connect to power supply. Check fuse, wiring, or circuit breaker.
	Blower door not in place	Install furnace blower door.
	Defective blower door switch	Replace switch.
Pilot will not light	Vent safety shut-off switch open	Check for vent blockage and proper installation of vent pipe.
	No spark at electrode	Readjust, if necessary, so that gap between electrode tip and pilot burner is as shown in Figure 15.
		Clean dirt or moisture accumulation from electrode ceramic with cloth.
		Cracked ceramic—replace pilot electrode assy.
		Check for loose or broken wiring at and between spark generator and electrode. Replace wire or tighten connection as necessary.
		Check fuse or circuit breaker for 115-volt supply to furnace.
		Check 24-volt input to spark generator. If you read 24 volts and above steps have been completed, replace spark generator assy.
	Spark shorting out to main burner	Readjust electrode as specified.
	No gas at pilot burner	Clean pilot orifice.
		Check voltage to terminals 3 and 5 or TR and TH of gas valve.
		Check for proper opening of pilot valve, broken wires, or loose connections. If no deficiency is found, replace valve assy.
Burners will not ignite	No 115-volt power to furnace	Connect to power supply. Check fuse, wiring, or circuit breaker.
	No 24-volt power to control circuit	Replace transformer.
	Miswired or loose connections	Check all wiring and all wirenut connections.
	No gas at main burners	Check voltage to terminals 1 and 2 or TR and TH of gas valve.
		Check for proper opening of main gas valve, broken wires, or loose connections. If no deficiency is found, replace gas valve assy.
	Dirty pilot—yellow flame	Clean pilot orifice.
Blower operates continuously	Thermostat fan switch in ON position	Move thermostat fan switch to AUTO position.
	Fusible link blown	Correct combustion air, venting system, and/or heat exchanger blockage—replace fuse link with identical part.
	Dirty filter causing limit operation	Clean or replace dirty air filter—reinstall.
	Defective heat relay	Replace printed-circuit board.
	Vent safety shut-off switch open	Check for vent blockage and proper installation of vent pipe.
Inadequate heating	Furnace undersized for application	Replace with proper size furnace.
	Gas input to furnace too low	Check gas pressure at manifold. Clock gas meter for input. If too low, increase manifold pressure or install correct orifices.
	Limit switch cycles main burners	Clean or replace dirty air filter—reinstall.
		Increase blower speed.
		Open registers—ductwork restricted.
	Thermostat anticipator set too low	Check thermostat circuit amps and set anticipator accordingly. See Figure 16.
Aldehyde odors, (CO), sooting flame—floating flame	Incomplete combustion—poor flame characteristics	Adjust air shutter on burners to provide soft, blue flame. Check all screws around flue outlets and burner compartment. Tighten.
		See "Section II, Location & Air for Combustion & Ventilation" (Std Procedures for Gas-Fired Furnaces).
		Replace cracked heat exchanger.
		Reduce input and check orifices—furnace overfired.
		Check vent for restriction.